PRODUCT ITEM NUMBER	FINISHIES
VR02L2-S	FROST NICKEL
VR02L2-B	SHADOW BLACK

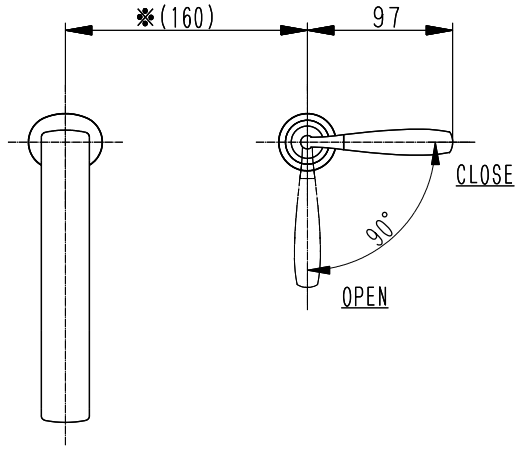

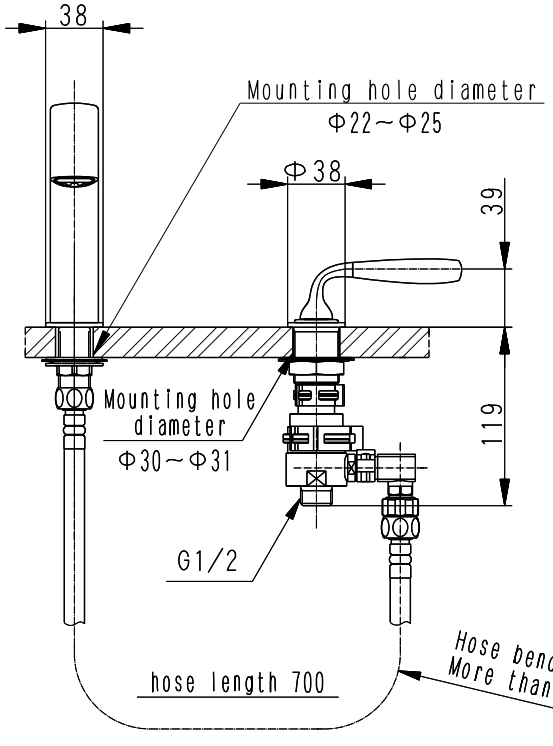

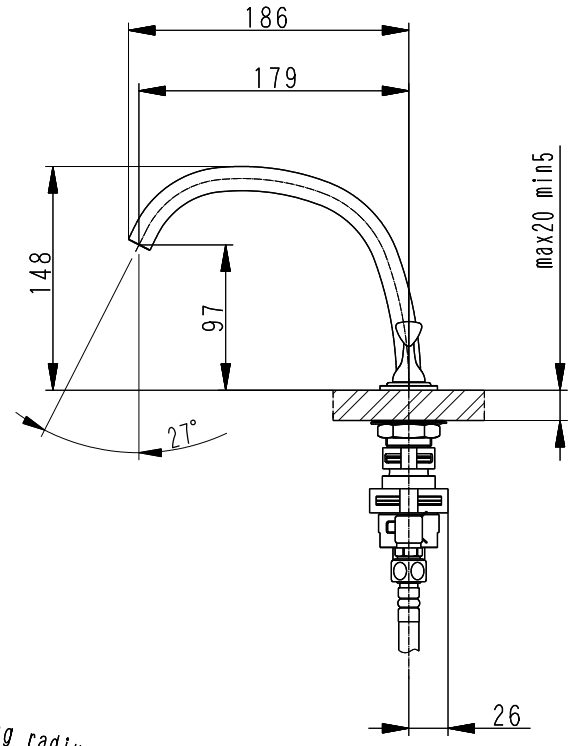

NOTES	All units other than angle notation are millimeter.	
PRODUCT NAME	LEVER TAP	VERSE
PRODUCT ITEM NUMBER	VR02L2-(FINISHES)	